Mechanical
advantage

- The function design of aluminum foil surface oiling is more reasonable, saving oil and sanitation
- Automatic tension control, automatic adjustment and no wrinkling by ultrasonic probe
- The feeding system realizes high feeding accuracy and wider stable feeding
- The press is stronger, with a net weight of 63T press of 8.5t and 80t press of 13T. It is more durable and stable. The latest customized design realizes mold replacement for 10min, faster and easier!
- 80 / 110t adopts H-type press and rare lubrication system with automatic circula-
- Automatic adjustment of die height
- The latest model MITSUBISHI PLC+13 inch touch screen, intelligent storage and call for production numbers, and quickly complete the replacement time after the mold.

Mould
advantage

- According to the European mold standard, it meets the hygienic requirements of the production of food grade wash free containers. It has a solid structure (mold1100kg). The mold steel used is more wear-resistant, processing accuracy is higher, and after-sales 2-year warranty.
- Superior structure design, realizing high-speed automatic stacking production
- The design of the container is optimized and the strength is better
- Lower production edge rejection
- Good applicability to different alloy aluminum foils 8011 / 3003 / 8006 can be applied
- Convenient production and maintenance, regular maintenance and cleaning

MOULD

STEAMED RICE IN CLAY POT

ONE OUT OF TWO

JOINT INSURANCE
FOR 1 YEAR

KJSLDK CKLVNXKLCJVKJSLDK CKLVN
KJSLDK CKLVNXKLCJVSDFJSDKLFJSDLKFJ SVSD
KJSLDK CKLVNXKLCJVSDFJSDKLFJSDLKFJ SDLF
KJSLDK CKLVNXKLCJVSDFJSDKLFJSDLKFJ SDSK
OGHPOFGMDFGOHKGPOFHGOKHFGOKH DC

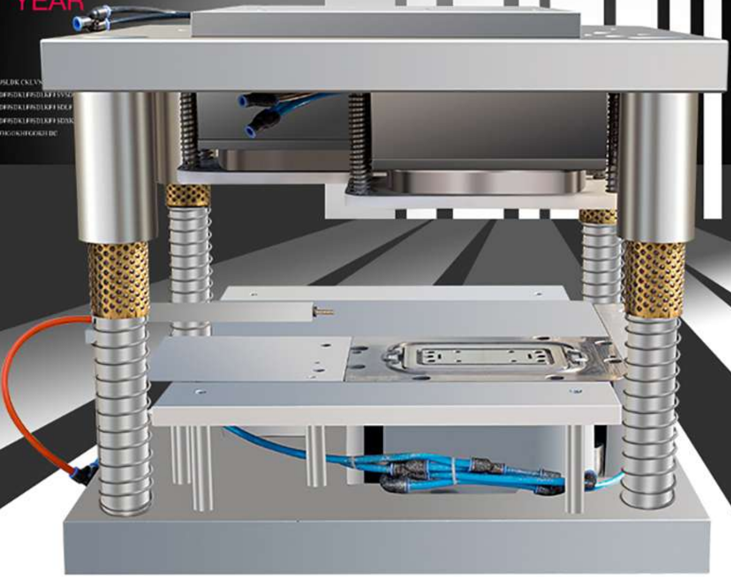

REASONS FOR CHOOSING US

FOCUS ON ALUMINUM FOIL MOLD, WE ARE THE STRENGTH GROUP

STAINLESS STEEL MATERIAL LONG SERVICE LIFE OF MOULD

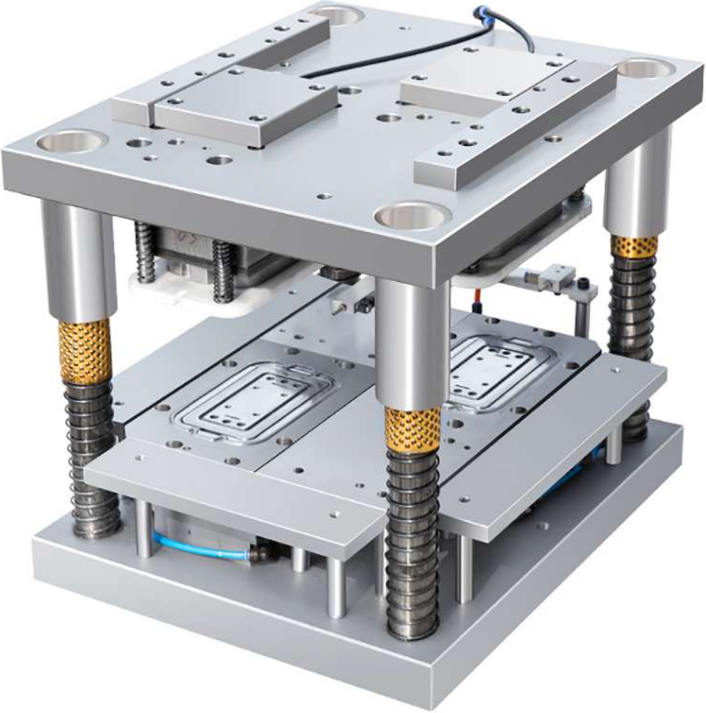

WIDE RANGE OF APPLICATIONS

IT IS REQUIRED BY THE USER TO BE USED IN THE

INSTALLATION OF GENERAL PRESS, AIR PRESS AND FOUR COLUMN PRESS

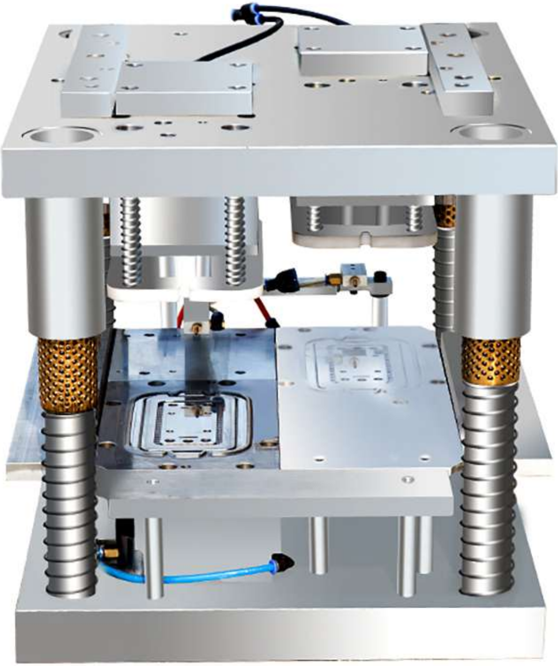

INTEGRATED FORMING

HE PROCESSING OF ALUMINUM FOIL UTENSILS CAN BE FINISHED BY CUTTING, FORMING, STRETCHING AND CRIMPING AT ONE TIME

COMPLETE PRODUCT SYSTEM, FROM SMOOTH AND WRINKLE FREE TO MULTI CAVITY, VARIOUS BORDERS (G–FRAME L FRAME OR IVC FOLDING, ETC.), SINGLE CELL TO MULTI CELL

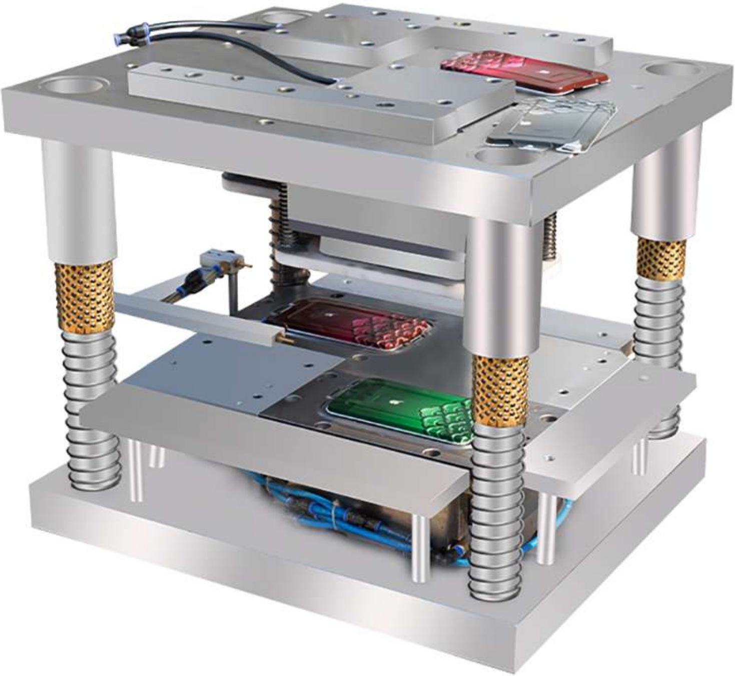

THE MOULD HAS LONG SERVICE LIFE, STABLE AND RELIABLE QUALITY, HIGH PRECISION, REASONABLE DESIGN AND PRECISE ADDITION WORKMANSHIP.

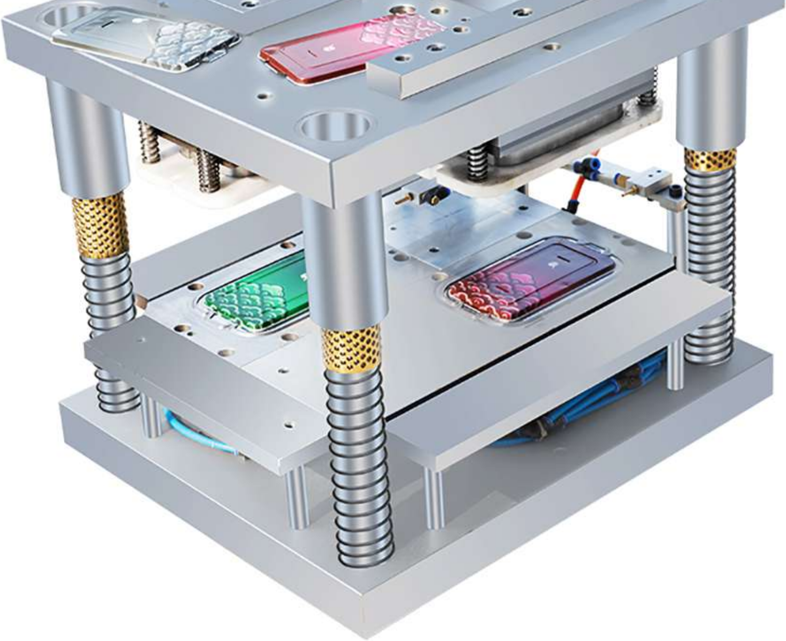

ADOPT CONVENIENT AND FLEXIBLE PNEUMATIC REBOUND DEVICE

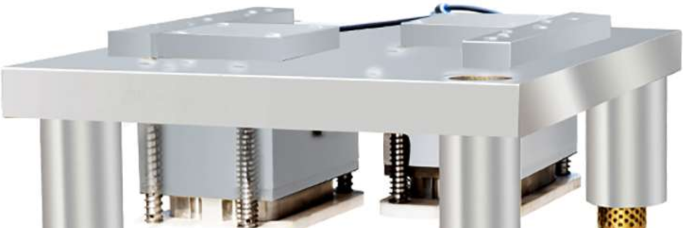

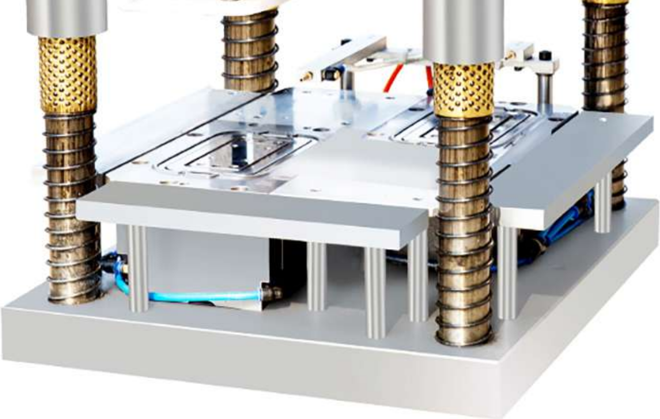

WE DON'T JUST MAKE PRODUCTS...

SERVICE VOLUME, SERVICE AND COMMITMENT

As the standard of European mold, meets the sanitary rule of food-grade no-wash container production, solid structure (1100kg mold), the mold steel adopted is more wear-resistant, higher processing accuracy, 1-year after-sales warranty.

NO WORRIES AFTER SALES

We reserve the right to upgrade the production line and molds, but we promise that the purpose of technical upgrading and configuration modification is to improve the performance of equipment and molds.
Thank you again for your support.

Return or change of goods without reasons | One year warranty | All-day after-sales service

On site debugging + Guided of maintenance + Service for repair

PRODUCTION EXAMPLE

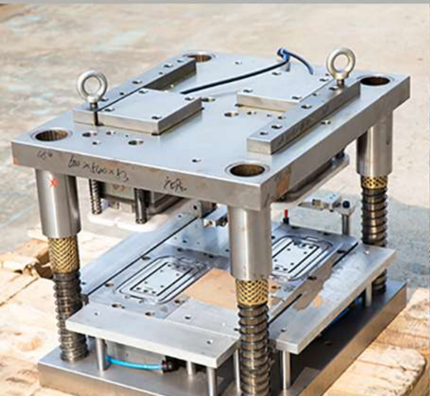

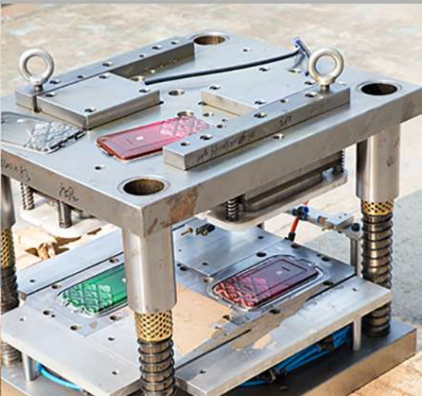

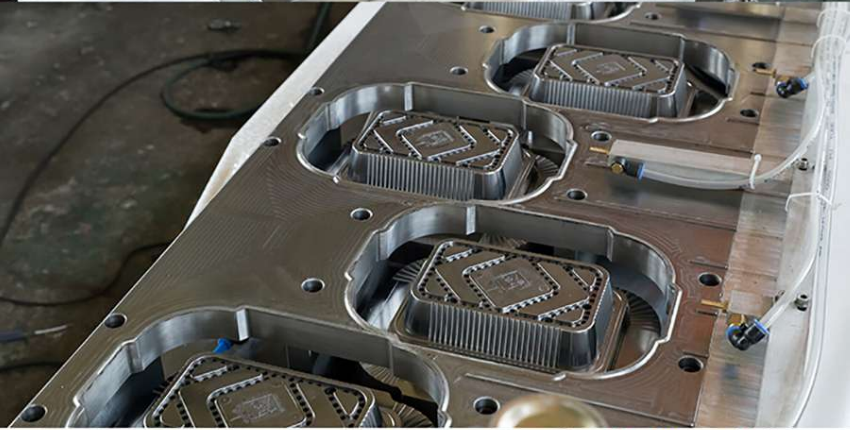

CUSTOMER CASE

YANGLI
YANGLI